Your vision, automated

MCOM101RTUCHMI

HMI – HUMAN MACHINE INTERFACE

The MCOM101RTUCHMI is a high-performance 10-inch touch HMI designed for advanced industrial automation. It features a 1024×600 resistive touch display, Cortex-A7 processor, and a Linux-based OS for smooth, reliable operation. With multi-serial ports, Ethernet communication, USB programming, QR code generation, and a built-in symbol library, it offers flexible integration across automation systems. Functions like alarms, RTC, recipe management, and scripting further enhance control capability. Its panel-mount design, IP65 front protection, and wide temperature tolerance make it suitable for demanding industrial environments.

➢ FEATURES

- 10” Touch screen
- In-Built symbol library
- Address Mapping
- Update program by USB flash
- Alarm, Calendar, Real time clock
- Multi - Serial communication
- Ethernet Communication
- QR code generator
- User/ Recipe management
- Script function

MCOM101RTUCHMI

SR. NO.	SPECIFICATIONS		MCOM100CHMI
1.	Display Specifications	Type	10” Touch screen
		Resolution	1024 X 600
		Display size	10” Diagonal
		Backlight	LED
		Span life	50000 Hrs.
		LCD Type	High precision four-wire resistive
		Brightness	250 cd/m2
2.	Functional specifications	Programming	Windows based software for HMI
		Processor	Cortex A7 1GHz
		OS	Linux 4.9.11 QT based
		Memory	128M Flash + 64MB RAM
		USB	USB2.0 Host + USB2.0 Client
		USB slave	Type B, program download/upload only
		Serial interface	COM1: RS232, COM2:RS485/422, COM3:RS485
		Ethernet Communication	Yes
		DB9	Male (COM1)
		Real-time clock	Yes

SR. NO.	SPECIFICATIONS		MCOM100CHMI	
3.	Mechanical specifications	Dimensions(W X H X D) MM	273 X 211 X 43	
		Mounting	Panel Mounting	
		Weight	1.052Kg	
		Ingress protection	IP65 (Front panel)	
		Cover material	PC+ABS plastics	
4.	Electrical specifications	Power supply voltage	24V DC (DC 12∼24V)	
		Rated power	< 15W	
5.	Environmental specifications	Temperature	Operating: -10 ∼ 60 °C	Storage: -20 ∼ 70 °C
		Humidity	10 ∼ 90% RH (Non-condensing)	
		Seismic performance	10 ∼ 25Hz (2G/30min in x,y,z directions)	

➢ DIMENSION DIAGRAM

All dimensions are in mm.

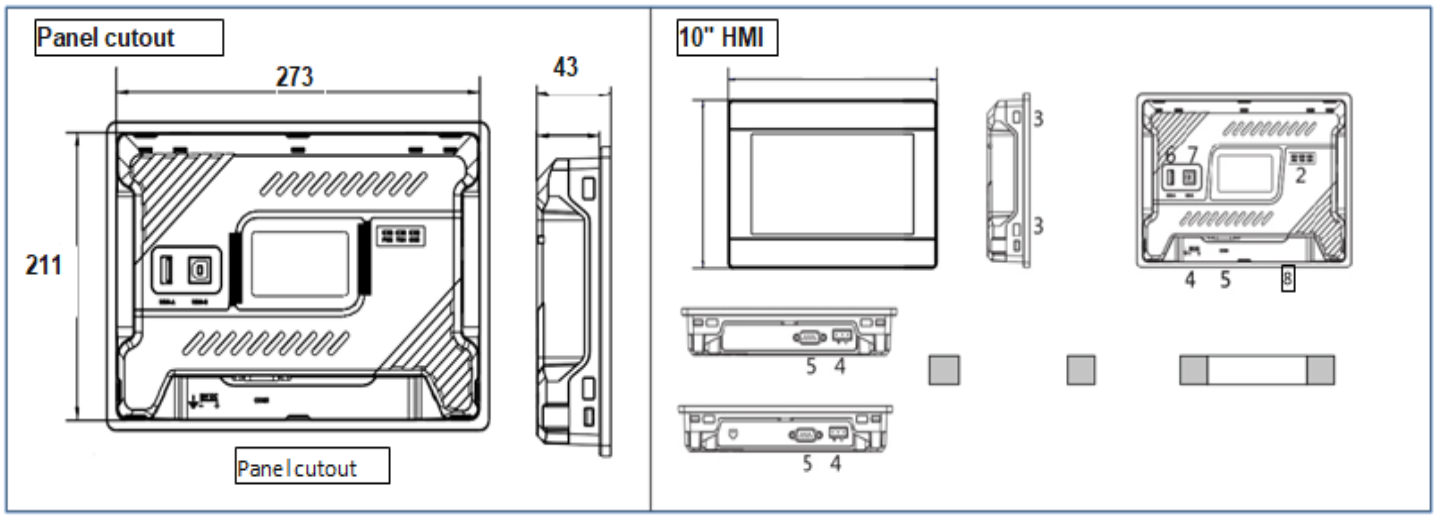

➢ DB9 PIN CONFIGURATION

Interface	PIN	
COM1	1	
	2	RS232 RXD
	3	RS232 TXD
	5	GND
	6	

Interface	PIN	
COM2	1	
	2	
	3	
	7	RS485 A+
	8	RS485 B -

Interface	PIN	
COM3	1	
	2	
	3	
	7	RS485 A+
	8	RS485 B -

MODERN COMMUNICATION TECHNOLOGY
Sr. No. 23, Plot No. 1, Hissa No. 3/1, Behind Wadekar Industries, Narhe, Pune-411041, Maharashtra (India)
Email Id. ravi@mcomtechnology.com , Web: -www.mcomtechnology.com
CONTACT: +91 9405134829, 7769827105, 9595383766