Your vision, automated

# MCOM100CHMI

## HMI – HUMAN MACHINE INTERFACE

The MCOM100CHMI is a high-performance 7- inch Human Machine Interface (HMI) designed for modern industrial automation applications. It features an 800×480 resistive touch display, Cortex-A7 processor, and a Linux-based OS for smooth and reliable operation. With multi-serial communication, optional Ethernet, USB programming, built-in symbol library, and real-time clock, it supports flexible integration in various automation systems. Its compact panel-mount design, IP65 front protection, and wide operating temperature range make it suitable for demanding industrial environments.

## ➢ FEATURES

- 7” Touch screen
- In-Built symbol library
- Address Mapping
- Update program by USB flash
- Alarm, Calendar, Real time clock
- Multi-Serial communication
- User / Recipe management
- Script function

# MCOM100CHMI

| SR. NO. | SPECIFICATIONS | | MCOM100CHMI |
|---|---|---|---|
| 1. | Display Specifications | Type | 7” Touch screen |
| | | Resolution | 800 X 480 |
| | | Display size | 7” Diagonal |
| | | Backlight | LED |
| | | Span life | 50000 Hrs. |
| | | LCD type | High precision four – wire resistive |
| | | Brightness | 450cd/m2 |
| 2. | Functional specifications | Programming | Windows based software for HMI |
| | | Processor | Cortex A 7 1GHz |
| | | OS | Linux 4.9.11 QT based |
| | | Memory | 128M Flash + 64MB RAM |
| | | USB | USB2.0 Host + USB2.0 Client |
| | | USB slave | Type B, program download / upload only |
| | | Serial interface | COM1: RS232, COM2:RS485/422 |
| | | Ethernet communication | Yes (Optional) |
| | | DB9 | Male (COM1) |
| | | Real - time clock | Yes |

# MCOM100CHMI

| SR. NO. | SPECIFICATIONS | | MCOM100CHMI | |
|---|---|---|---|---|
| 3. | Mechanical specifications | Dimensions(W X H X D) MM | 203 X 145 X 35 | |
| | | Mounting | Panel Mounting | |
| | | Weight | 0.7Kg | |
| | | Ingress protection | IP65 (Front panel) | |
| | | Cover material | PC+ABS plastics | |
| 4. | Electrical specifications | Power supply voltage | 24V DC (DC 12∼24V) | |
| | | Rated power | < 15W | |
| 5. | Environmental specifications | Temperature | Operating: -10 ∼ 60 °C | Storage: -20 ∼ 70 °C |
| | | Humidity | 10 ∼ 90% RH (Non-condensing) | |
| | | Seismic performance | 10 ∼ 25Hz (2G/30min in x,y,z directions) | |

## ➢ DIMENSION DIAGRAM

All dimensions are in mm.

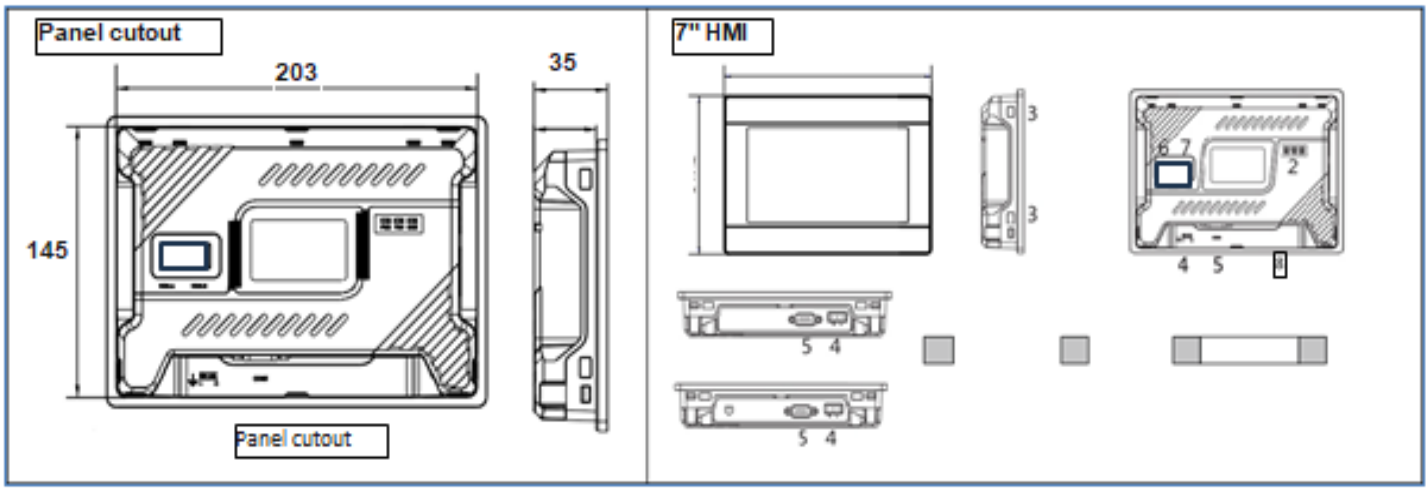


## ➢ DB9 PIN CONFIGURATION

| Interface | PIN | |
|---|---|---|
| COM1 | 1 | |
| | 2 | RS232 RXD |
| | 3 | RS232 TXD |
| | 5 | GND |
| | 6 | |

| Interface | PIN | |
|---|---|---|
| COM2 | 1 | |
| | 2 | |
| | 3 | |
| | 8 | RS485 B- |
| | 9 | RS485 A+ |

MODERN COMMUNICATION TECHNOLOGY
Sr. No. 23, Plot No. 1, Hissa No. 3/1, Behind Wadekar Industries, Narhe, Pune-411041, Maharashtra (India)
Email Id. ravi@mcomtechnology.com , Web: -www.mcomtechnology.com
CONTACT: +91 9405134829, 7769827105, 9595383766