Your vision, automated

MCOM304IO

INDUSTRIAL INPUT OUTPUT MODULE

The MCOM304IO is an industrial I/O expansion module offering 16 digital inputs, 16 digital outputs, and 8 analog outputs with photocoupler isolation. It supports RS-485 Modbus RTU communication and is designed for reliable automation, control, and monitoring applications.

➢ FEATURES

- Source-type Digital Outputs.
- Sink-type Digital Inputs.
- Photocoupler Isolation.
- Single-ended for Analog Output.
- Resolution: 12 bit for Analog Output.
- Watchdog.
- Cost-effective.
- Wide Operating Temperature Range: -25 °C ~ +75 °C.

➢ INPUT OUTPUT SPECIFICATIONS

Digital Input	
Input Channels	16
Type	Wet Contact (Sink)
On Voltage Level	+12.0 VDC ~ 30 VDC
Off Voltage Level	+11 V max.
Input Impedance	10 KΩ, 0.66 W
Digital Output	
Output Channels	16
Type	Open Collector (Source)
Max. Load Current	500 mA/channel
Load Voltage	+12 VDC ~ +30 VDC
Analog Output	
Output Channels	8
Type	0 ~ 20 mA/ 4 ~ 20 mA

➢ SYSTEM SPECIFICATIONS

COMMUNICATION	
Interface	RS-485
Format	(N, 8, 1), (N, 8, 2), (O, 8, 1), (E, 8, 1)
Baud Rate	1200 ~ 115200 bps
Protocol	Modbus/RTU
Watchdog	Yes
POWER REQUIREMENTS	
Reverse Polarity Protection	Yes
Powered from Terminal Block	Yes, 12 ~ 30 VDC
Consumption	0.5 W Max.
ENVIRONMENT	
Operating Temperature	-25 °C ~ +75 °C
Storage Temperature	-30 °C ~ +75 °C
Humidity	10 ~ 95% RH, Non-condensing

➢ APPLICATIONS

- Industrial Automation
- Industrial Machinery
- Building Automation
- Food and Beverage Systems
- Semiconductor Fabrication
- Control Systems

➢ DIMENSION DIAGRAM

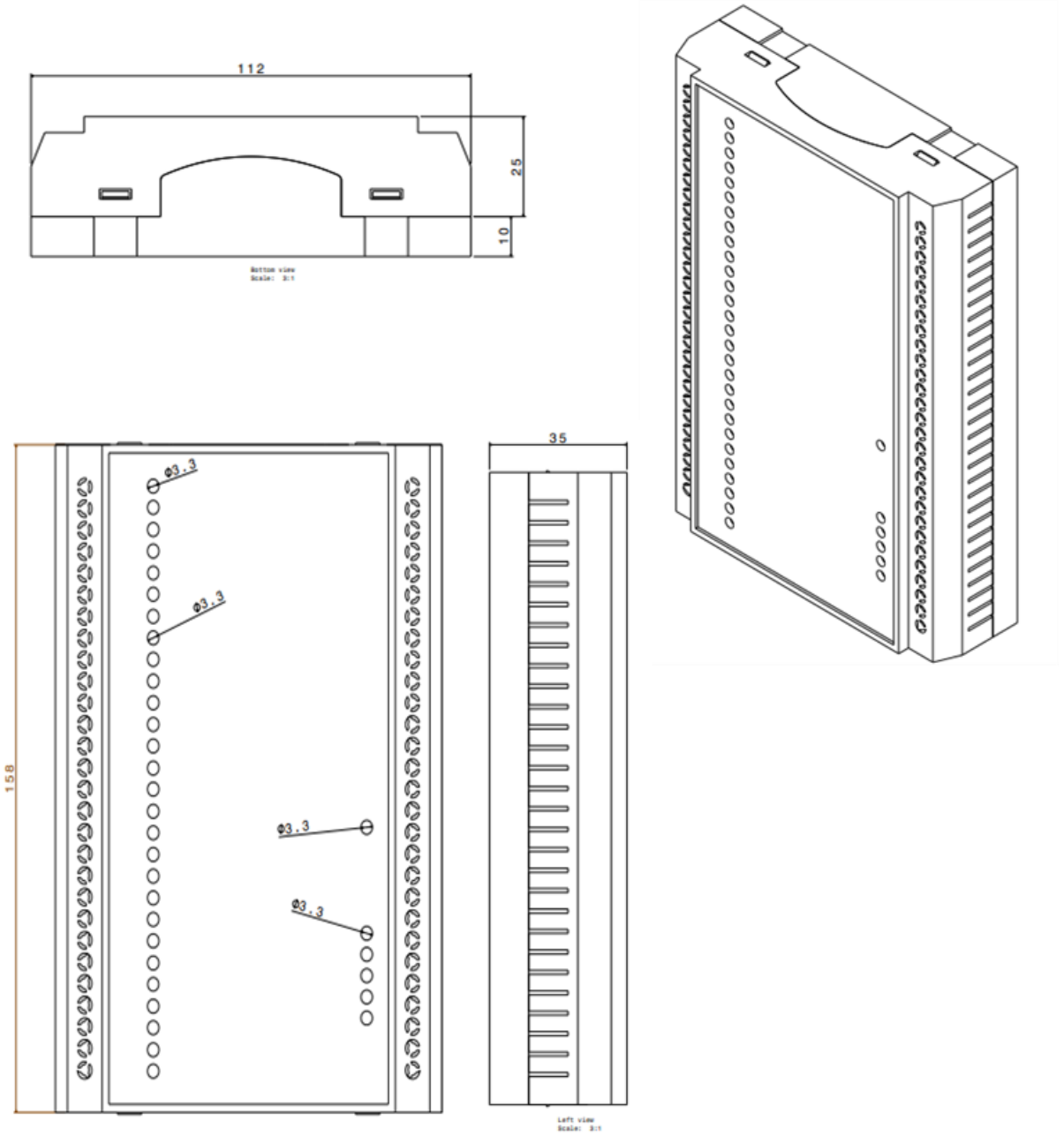

➢ DIGITAL INPUT

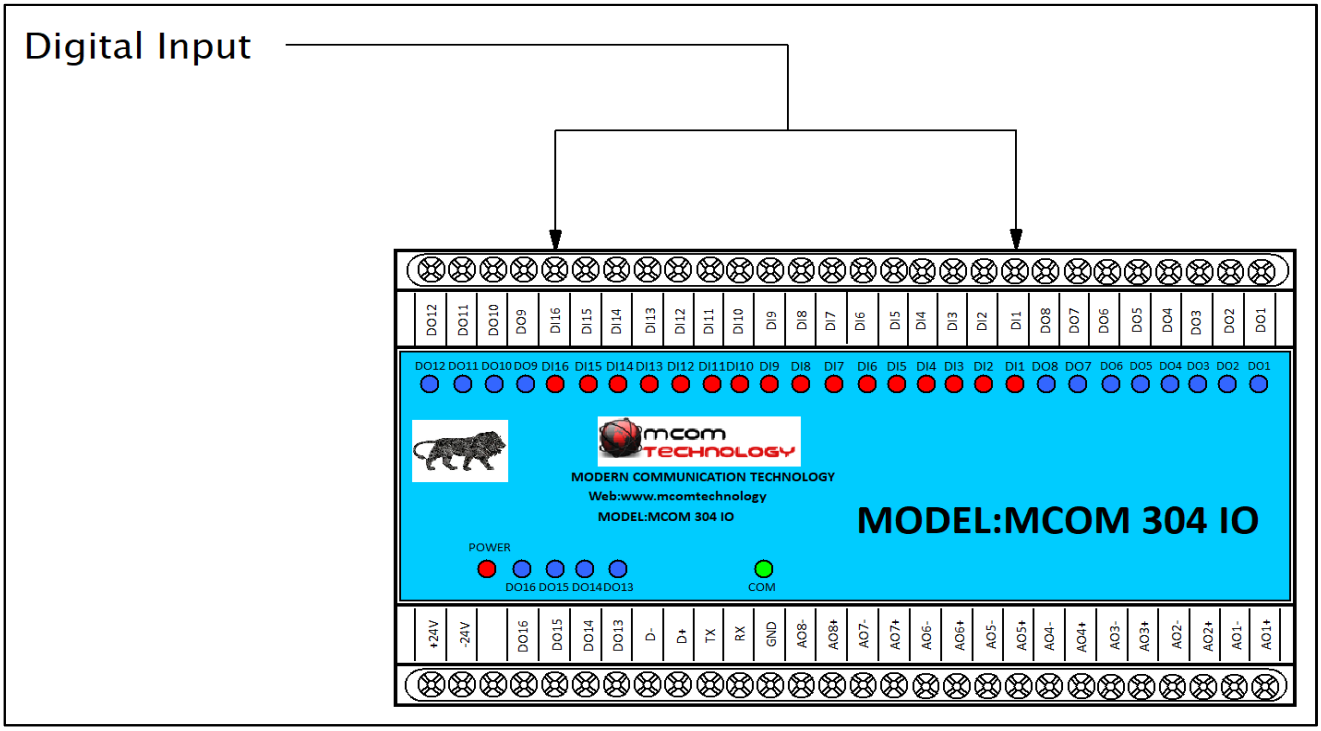

➢ DIGITAL OUTPUT

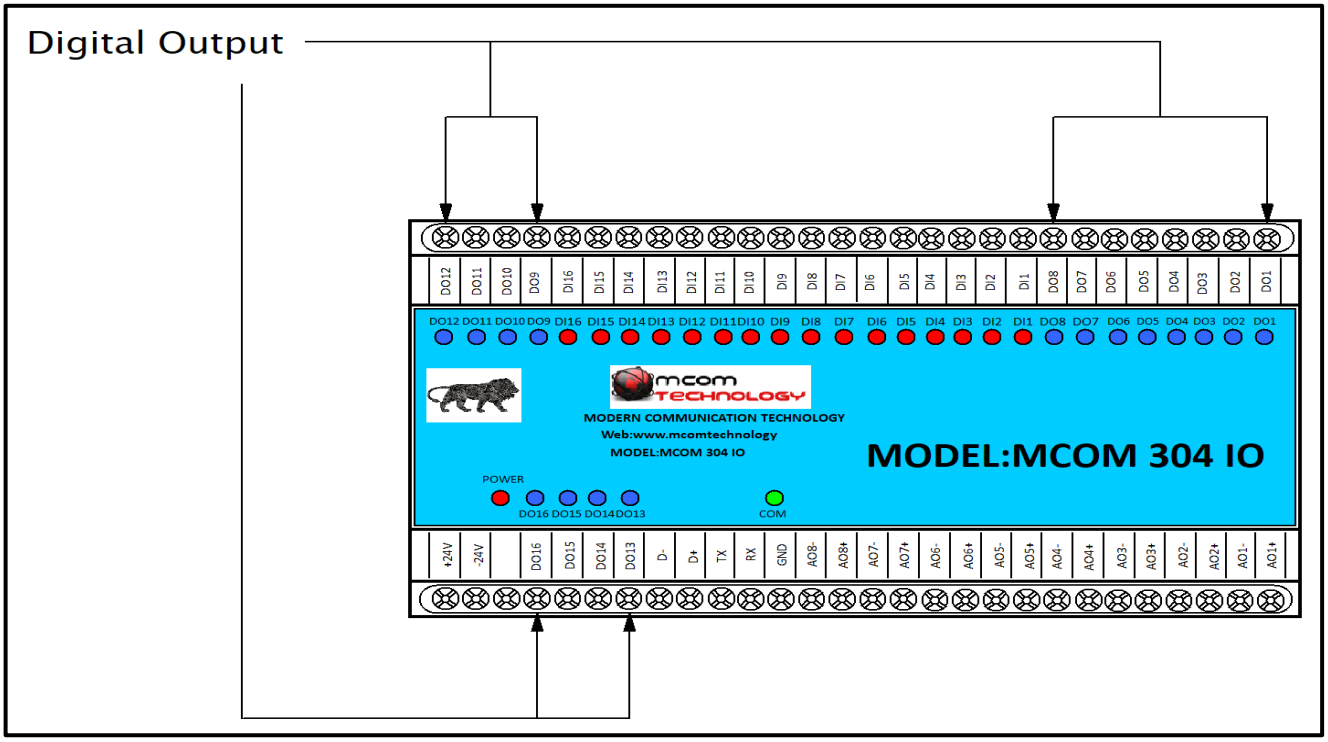

➢ ANALOG OUTPUT

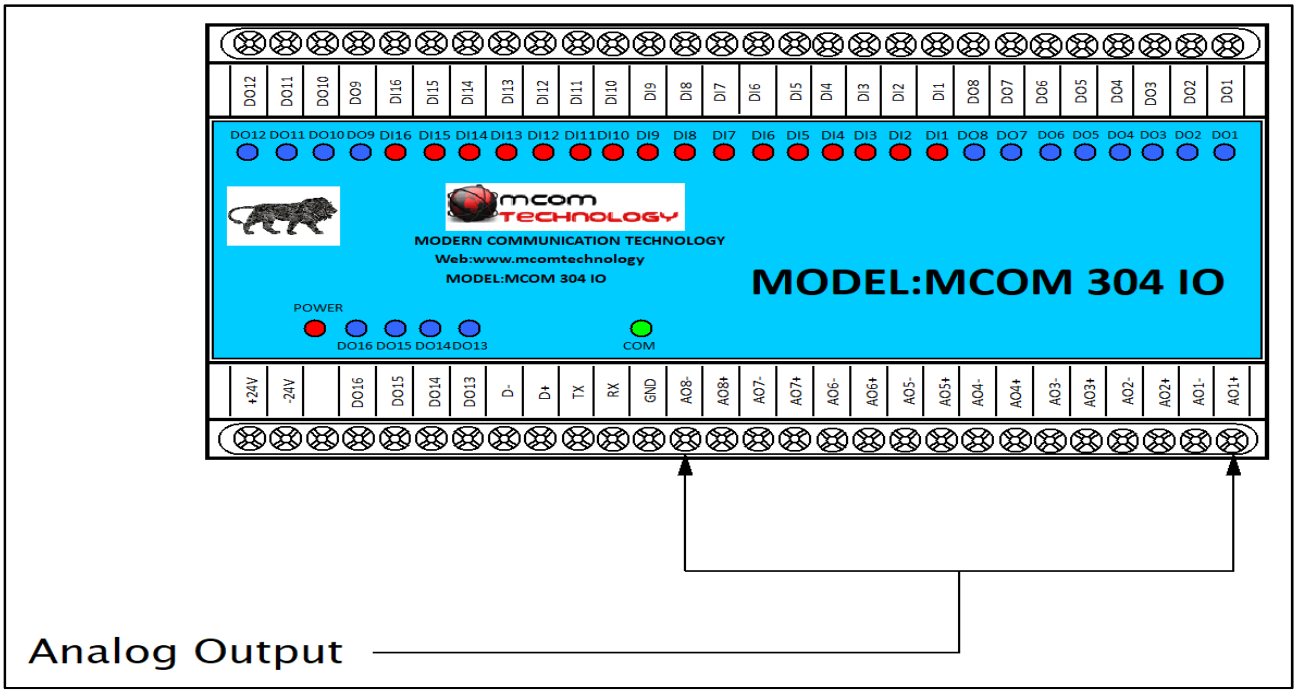

➢ POWER & RS485

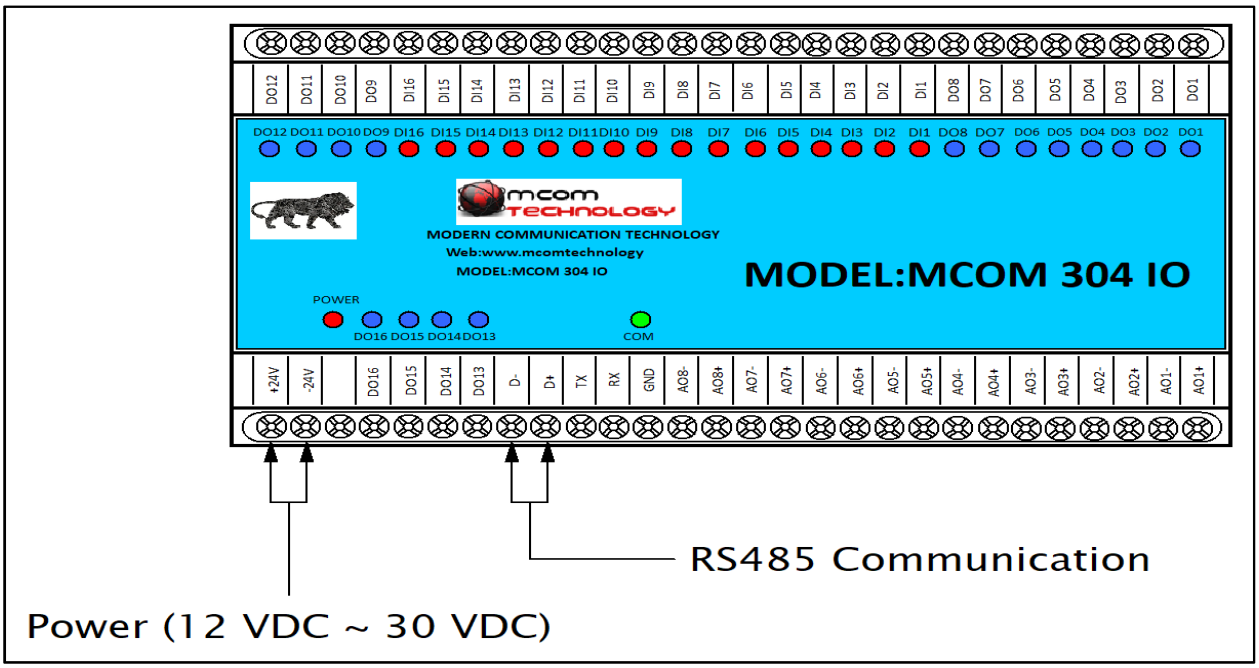

MODERN COMMUNICATION TECHNOLOGY
Sr. No. 23, Plot No. 1, Hissa No. 3/1, Behind Wadekar Industries, Narhe, Pune-411041, Maharashtra (India)
Email Id. ravi@mcomtechnology.com , Web: -www.mcomtechnology.com
CONTACT: +91 9405134829, 7769827105, 9595383766