Your vision, automated

MCOM400DIL

CELLULAR M2M RS232/RS485/LAN

The MCOM400DIL is a rugged 4G cellular modem designed for reliable remote monitoring and control in industrial M2M/IoT applications. It features dual SIM support, RS232/RS485 communication, digital and analog inputs, pulse inputs, and MODBUS RTU Master capability. With wide network compatibility, DIN-rail mounting, and remote configuration via SMS or server, it provides secure, continuous, and intelligent data connectivity for automation, energy, and metering applications.

➢ CELLULAR INTERFACE

- Standards: GSM/GPRS/EDGE/UMTS/HSPA/FDD LTE
- GPRS/EDGE: 850/900/1800/1900 MHz
- HSUPA: 900/2100 or 850/1900 MHz optional, DL/UL 7.2/5.76 Mbps, fallback to 2G.
- HSPA+: 850/900/1900/2100 or 900/2100 or 850/1900 MHz optional, DL/UL 14.4/5.76 Mbps, fallback to 2G, FDD LTE: 800/900/1800/2100/2600 MHz or 700MHz (B17 or B13) optional, DL/UL 100/50 Mbps, fallback to 3G/2G.
- SIM: 2 x (3V & 1.8V)
- Antenna Interface: SMA Female, 50 ohms impedance.32-bit high performance microcontroller MCU

MCOM400DIL

➢ FEATURES

- Supports all types of 4G SIM cards.
- The data transmission mode is 4G/3G/2G (auto-switchable).
- Supports all types of M2M SIMs
- Micro SD up to 16GB
- Comes with LAN port
- Supports dual redundancy for SIM cards.
- Small antennae included with the device. High gain antennae optional, in case of low connectivity.
- Two Serial Ports for RS232 and RS485 for external device interface.
- Five LED indicators provide status for power, server connection, GPRS connection, SIM registration or network, 4G indications.
- Phase AC input supply, worked within power supply range of 50 to 240V AC, 50 Hz.
- Operating temperature: -25 to 85 °C.
- The plastic enclosure can be mounted on a DIN-rail.
- Supports MODBUS/RTU.
- Auto reboot during a pre-set time of a day.
- Industrial class design suitable for long time work applications.
- Facility to store mobile numbers for authorization of remote configuration.
- Configuration of device parameters via serial port or remotely by SMS.
- Handshaking software is provided at central server for device-SCADA/web application communication.

➢ APPLICATIONS

- PLC/MODBUS device data monitoring and controlling
- Energy Monitoring, e.g. Electricity, Solar, Wind, etc.
- Water Metering/Flow Meter
- Distribution Automation
- Automatic Meter Reading

SERIAL COMMUNICATION	
Interface standard and protocol	RS485, RS232, MODBUS RTU
Communication address	1 TO 255
Transmission mode	Half duplex, Full duplex
Transmission distance	1000m for RS485 and 15m for RS232
Transmission speed	4800, 9600,19200 (in bps)
Data type	Integer, Float, Hex
Parity	None, Odd, Even
Stop bit	1 or 2
Response time	100..1000ms

PERFORMANCE PARAMETER	
Operating Temperature	-25 to 85°C
Storage Temperature	-40 to 85°C
Humidity	5 to 95% RH
Input Voltage	10 to 40 VDC
Power Consumption	Idle: 100 mA @ 12 V, Data Link: 500 to 1000 mA (peak) @ 12V
Dimension (L x W x H)	110 x 110 x 35 mm

➢ DIMENSION DRAWING

➢ CONNECTION DETAILS

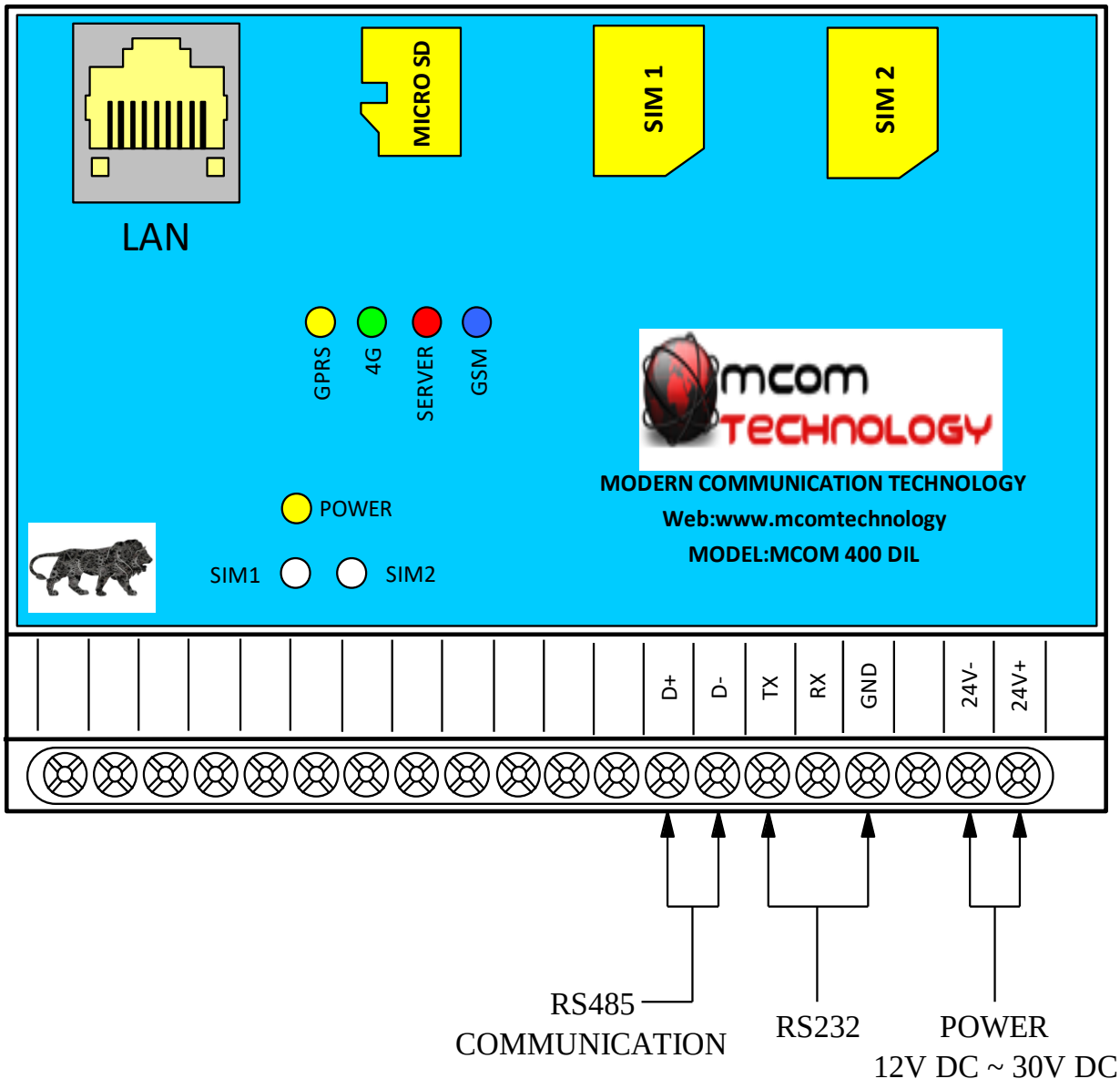

MODERN COMMUNICATION TECHNOLOGY
Sr. No. 23, Plot No. 1, Hissa No. 3/1, Behind Wadekar Industries, Narhe, Pune-411041, Maharashtra (India)
Email Id. ravi@mcomtechnology.com , Web: -www.mcomtechnology.com
CONTACT: +91 9405134829, 7769827105, 9595383766