Your vision, automated

MCOM400TIRTU

4G, 3G, 2G, IOT BASED RS232/RS485 MODEM

MCOM's industrial modem range provides simple, secure, and cost-effective connectivity for machine-to-machine (M2M) and Industrial IoT (IIoT) applications. Supporting 4G LTE Cat-1, 3G, and 2G networks, these compact devices deliver dependable data transmission in challenging environments. MCOM400TIRTU is a rugged cellular MODEM offering state-of-the-art mobile connectivity for machine to machine (M2M) applications. It works in transparent mode. This device is suitable for data monitoring and operation from remote device, and for remote PLC or any MODBUS communication via serial port. The minimum data rate from remote to central server is 1 sec.

➢ CELLULAR INTERFACE

- Standards: GSM/GPRS/EDGE/UMTS/HSPA/FDD LTE
- GPRS/EDGE: 850/900/1800/1900 MHz
- HSUPA: 900/2100 or 850/1900 MHz optional, DL/UL 7.2/5.76 Mbps, fallback to 2G.
- HSPA+: 850/900/1900/2100 or 900/2100 or 850/1900 MHz optional, DL/UL 14.4/5.76 Mbps, fallback to 2G, FDD LTE: 800/900/1800/2100/2600 MHz or 700MHz (B17or B13) optional, DL/UL 100/50 Mbps, fall-back to 3G/2G.
- SIM: 1 x (3V & 1.8V)
- Antenna Interface: SMA Female, 50 ohms impedance. 32-bit high performance microcontroller MCU

MCOM400TIRTU

SERIAL COMMUNICATION	
Interface standard & protocol	RS485, RS232 and MODBUS RTU
Communication address	1 TO 255
Transmission mode	Half duplex, Full duplex
Transmission distance	1000m for RS485 and 15m for RS232
Transmission speed	300, 600, 1200, 2400, 4800, 9600,19200 (in bps)
Data type	Integer, Float, Hex
Parity	None, Odd, Even
Stop bit	1 or 2
Response time	1000ms

FEATURES	APPLICATION
• Supports all types of 4G SIM cards. • The data transmission mode is 4G/3G/2G (auto-switchable). • Supports all types of M2M SIMs. • Small antenna included with the device. High gain antenna optional, in case of low connectivity. • One Serial Port for RS232 or RS485 for external device interface. • Five LED indicators provide status for power, server connection, GPRS connection, SIM registration or network, 4G indication	• PLC/MODBUS device data monitoring and controlling • Energy Monitoring, e.g. Electricity, Solar, Wind, etc. • Water Metering/Flow Meter • Distribution Automation • Automatic Meter Reading • Industrial Automation • Remote Devices

Performance Parameters	
Operating Temperature	-25 to 85°C
Storage Temperature	-40 to 85°C
Humidity	5 to 95% RH
Input Voltage	10 to 40 VDC
Power Consumption	Idle: 100 mA @ 12 V, Data Link: 500 to 1000 mA (peak) @ 12V
Dimension (L x W x H)	110 x 94 x 35 mm

➢ DIMENSION DIAGRAM

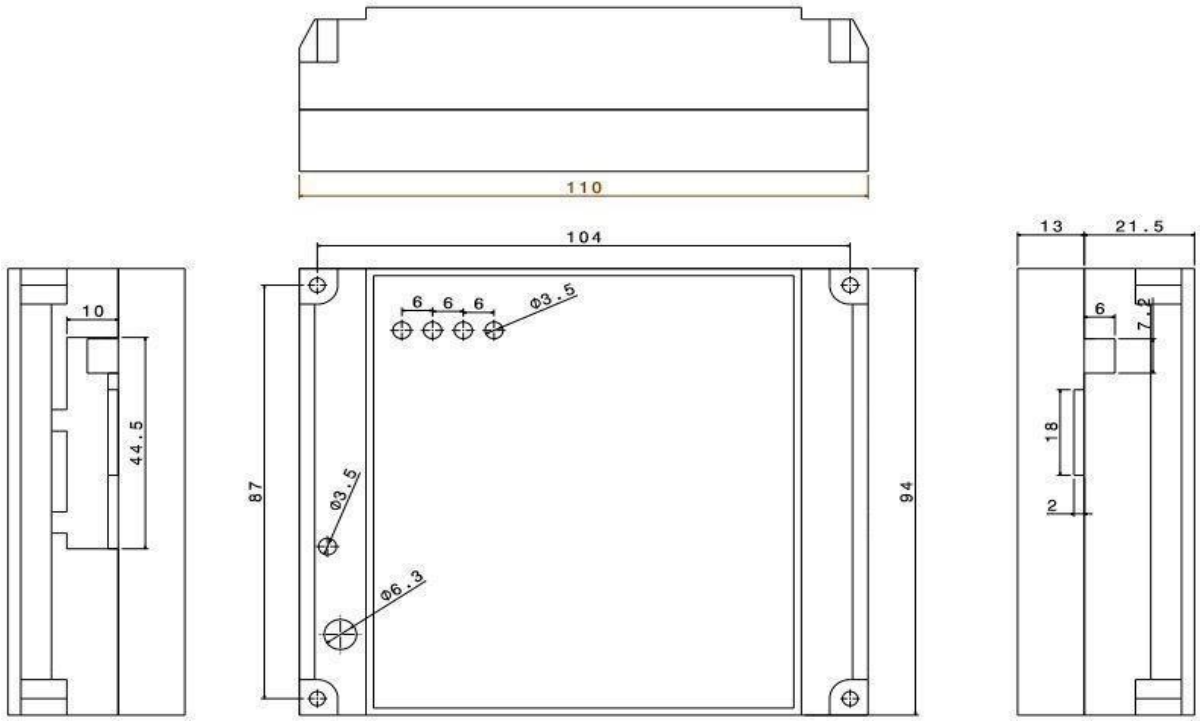

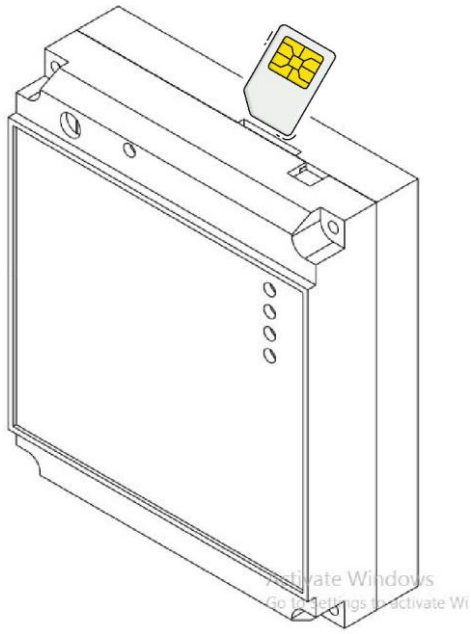

Activate Windows
Go to Settings to activate Wi

➢ CONNECTION DETAILS

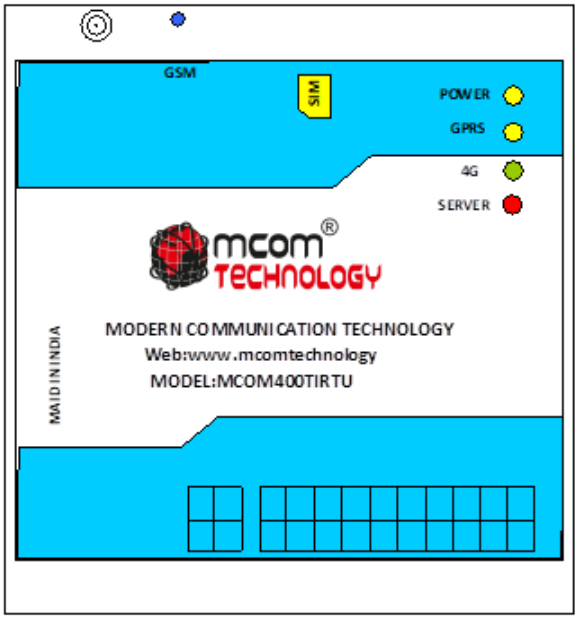

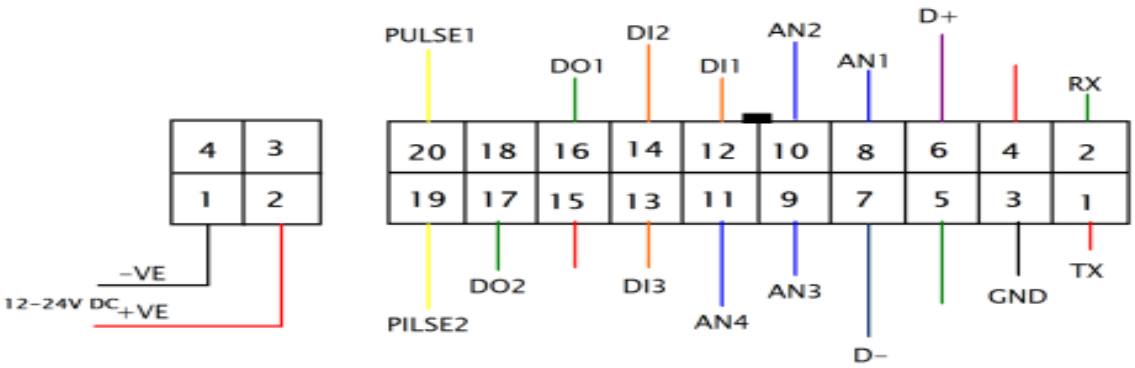

MODERN COMMUNICATION TECHNOLOGY
Sr. No. 23, Plot No. 1, Hissa No. 3/1, Behind Wadekar Industries, Narhe, Pune-411041, Maharashtra (India)
Email Id. ravi@mcomtechnology.com , Web: -www.mcomtechnology.com
CONTACT: +91 9405134829, 7769827105, 9595383766